DEPSET-45A

45 mm Blade Style Depth Set Tool

Proper placement of paddles and baskets is a USP requirement for dissolution tests. The Tetracycline Hydrochloride Tablets monograph is unique as it states the bottom of a paddle or basket must be 45 ± 5 mm from the bottom of the dissolution vessel. Adhering to this requirement ensures that results are comparable from vessel to vessel and test to test.

The Quality Lab Accessories DEPSET-45A depth set tool is made from durable acrylic, can be used wet or dry, is wash safe and will allow for the correct placement of the paddle or basket for the Tetracycline Hydrochloride Tablet testing. Each DEPSET-45A is serialized and includes a 1year calibration certificate. QLA can also recalibrate any DEPSET-45A.

For more information, contact your QLA Representative or Distributor.

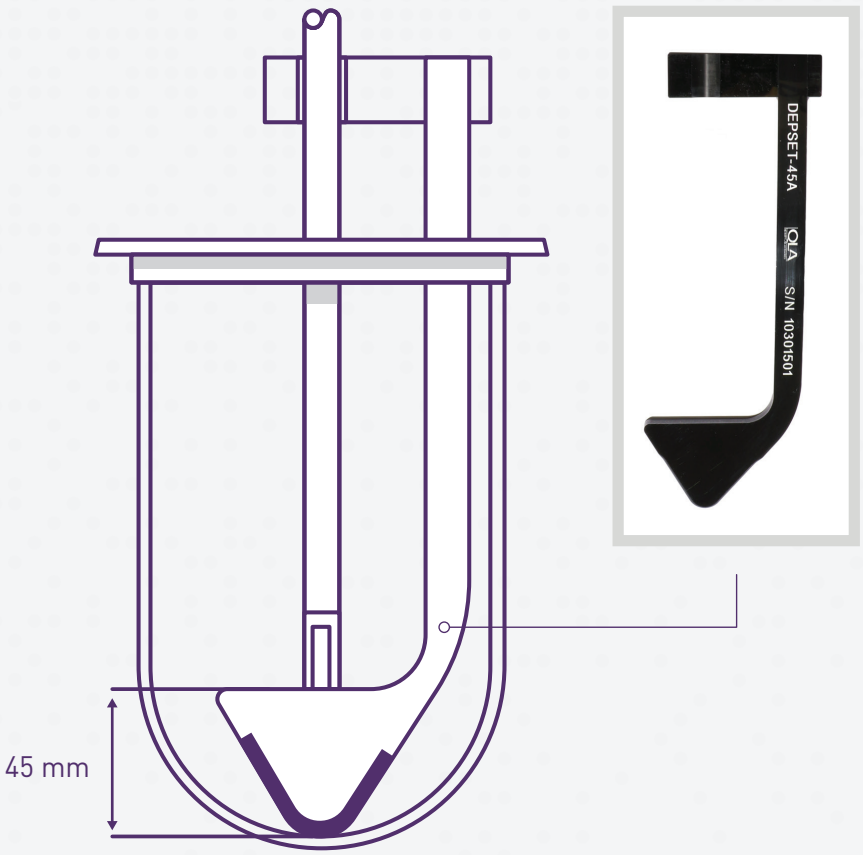

YOUR DISSOLUTION SPECIALISTS

QUALITY LAB ACCESSORIES

2840 CLYMER AVE // TELFORD, PA 18969 // TEL 908-685-7500 // FAX 908-526-4151 // QLA-LLC.COM